barths

ASSEMBLY INSTRUCTIONS

HELSINKI

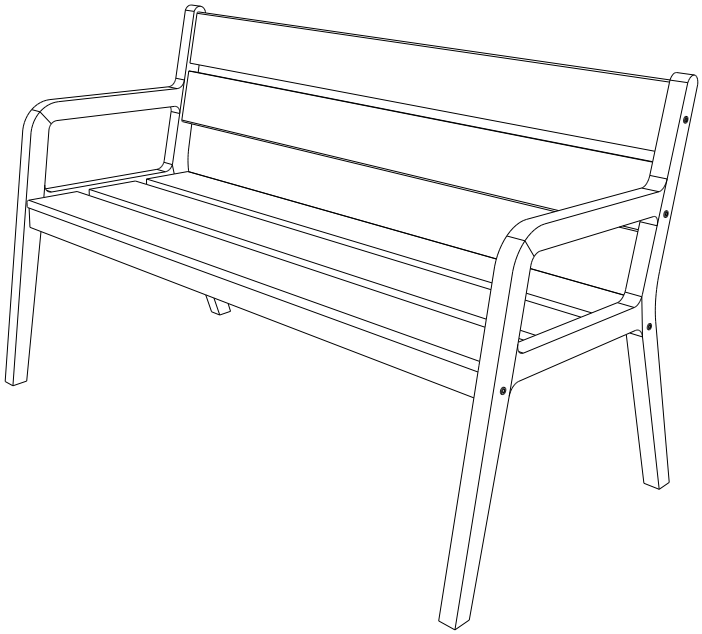

Part List			
A	Seat Back	B	Seat
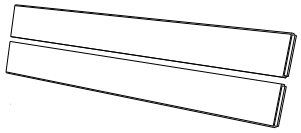		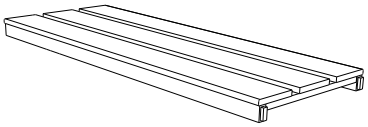	
C	Left leg	D	Right leg
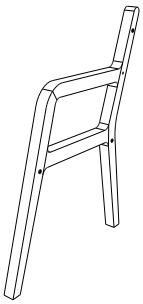		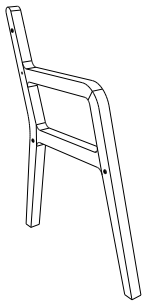	

Tools Included			
1	Bolts (M6x6) = 8 sets	2	Allen Wrench = 1 pc
			

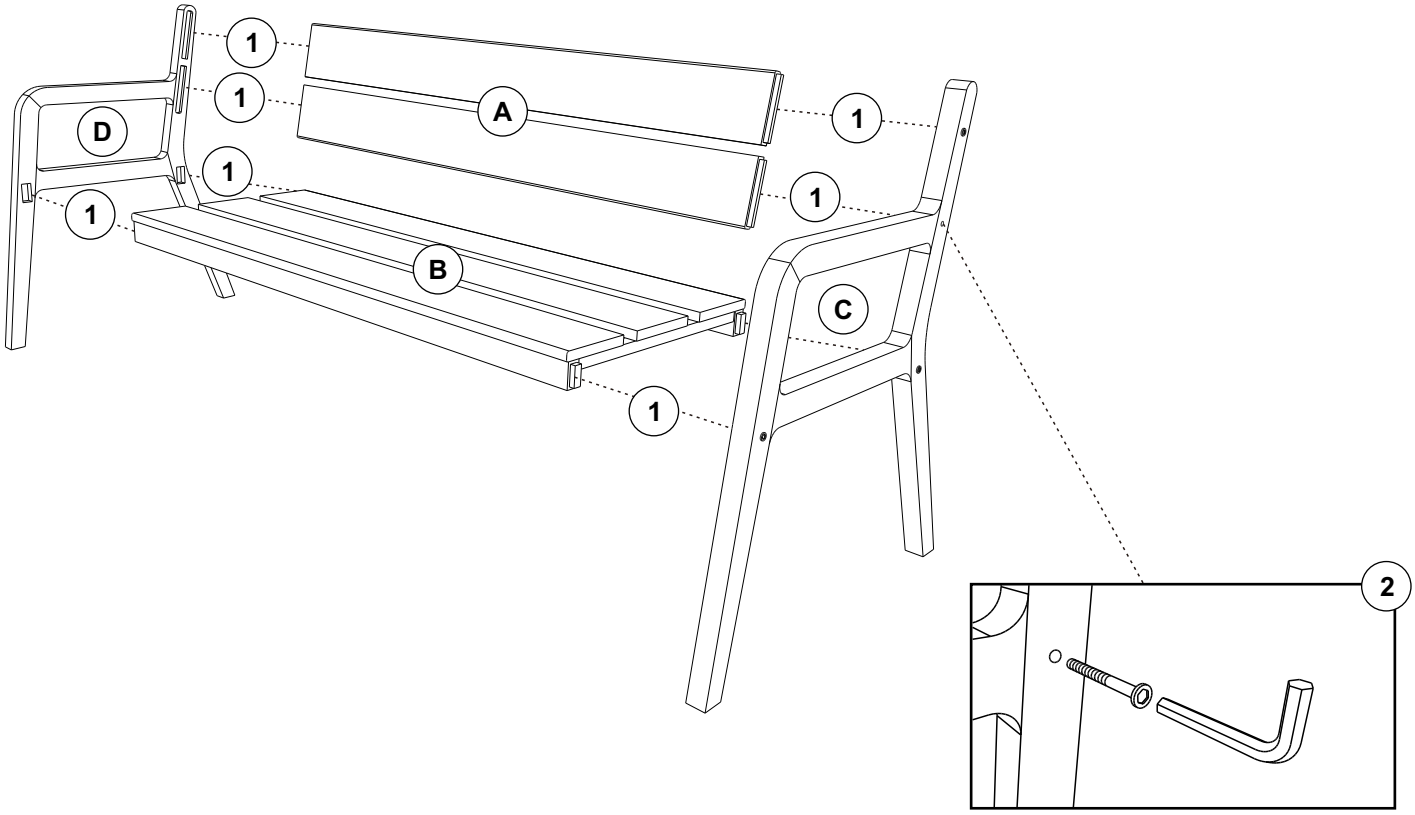

Make sure all tenon and mortise joints fit snug, Only use pressure or a rubber mallet to apply pressure.
Do not use a hammer directly againts the wood.